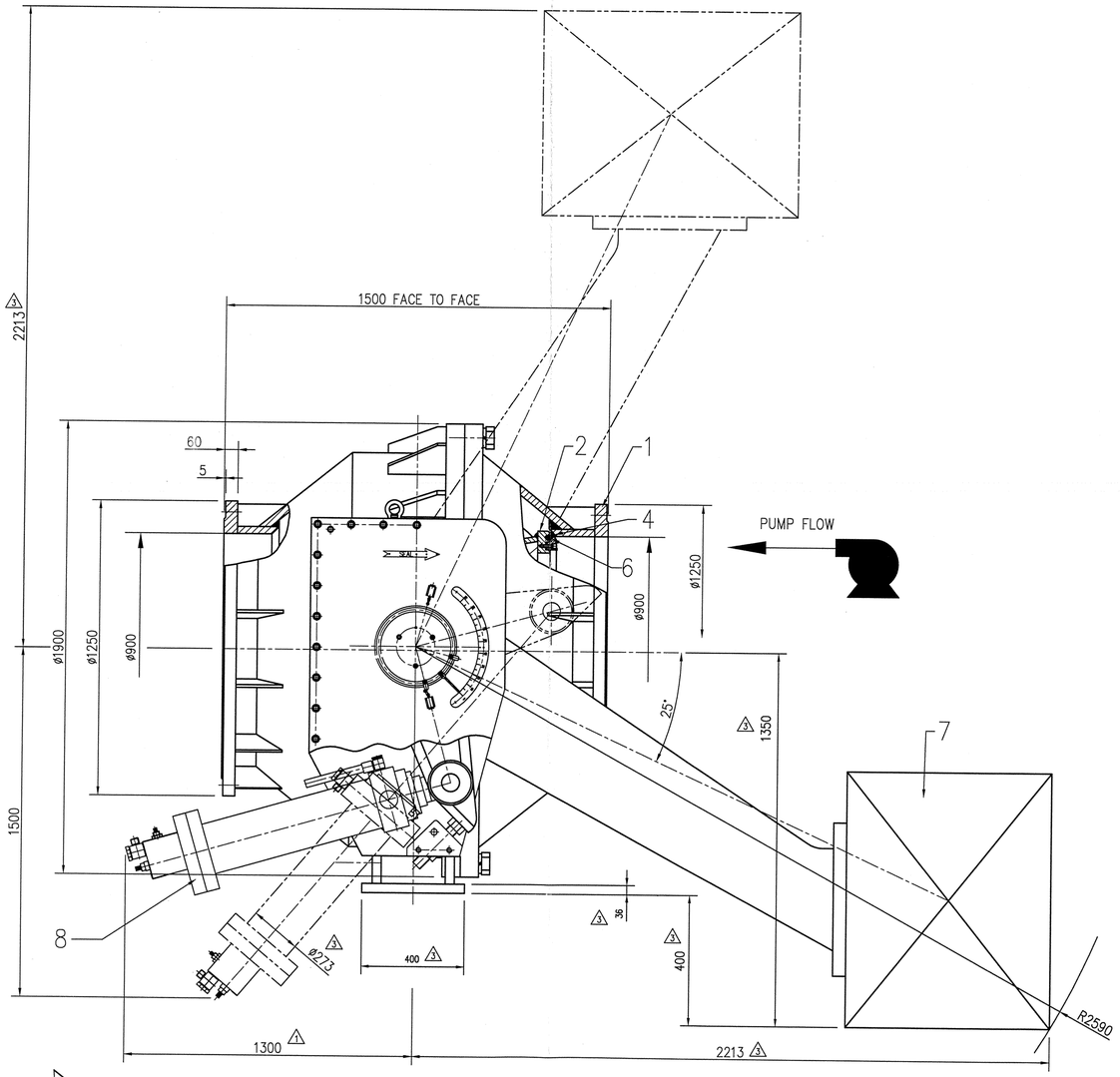

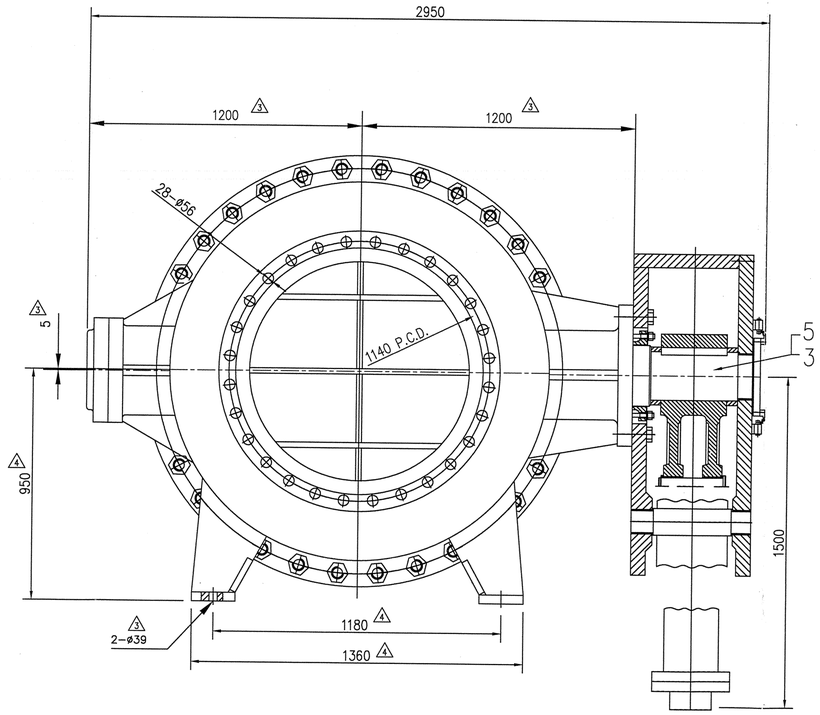

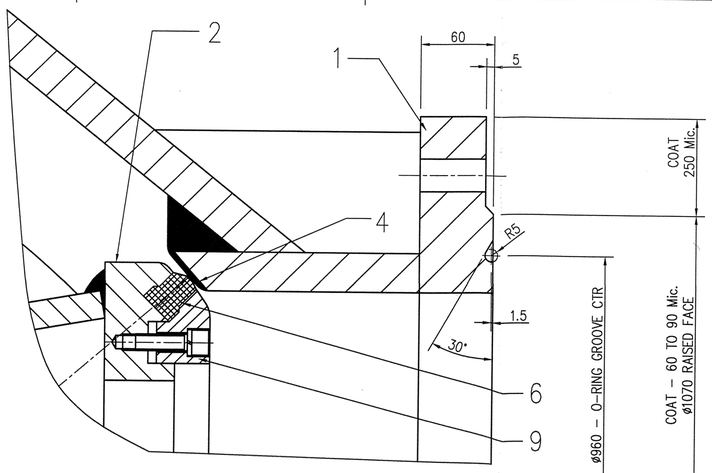

DETAIL OF SEAL AREA

DEPARTMENT OF WATER AFFAIRS AND FORESTRY

CUSTOMER: DEPARTMENT OF WATER AFFAIRS AND FORESTRY
CONTRACT No. W9982
ORDER No. 4500151296
ITEM No: 36

VALVE SPECIFICATION:

PRESSURE RATING: 4000 kPa.
PRESSURE TESTING:
BODY PRE-TEST (UNCOATED) 6000 kPa
TRUNION TEST PRESSURE (DIRECTION OF FLOW) 6000 kPa
SEAT TEST PRESSURE (DIRECTION OF FLOW) 4400 kPa

GEARBOX ORIENTATION: VALVE – LEVER & WEIGHT ON LEFT HAND SIDE, IN DIRECTION OF FLOW

FLANGES: DRILLING TO BS 4504 – 1969 PN40
28 – HOLES EQUI-SPACED OFF CRS ON A 1140 P.C.D.
28 – HOLES DRILL ø56 / SPOTFACE BACK OF FLANGE ø105

CORROSION PROTECTION:
SURFACE PREPERATION: GRIT BLAST SABS 064 – Sa 3
INTERNAL: SOLVENT FREE TWO PACK EPOXY – 400 MIC.
EXTERNAL: SOLVENT FREE TWO PACK EPOXY – 400 MIC.
FINAL COAT – BRILLIANT GREEN – SABS 1091 – CODE H10 POLYURETHANE – 50 MIC.

FLANGE FACES: SOLVENT FREE TWO PACK EPOXY – 60 to 90 MIC. (REFER TO FLANGE DETAIL)

SEAL RETAINING RING: TWO PACK EPOXY – 125 MIC.
SEAL RETAINING BOLTING: TWO PACK EPOXY – 125 MIC.

BOLTING: WASHERS TO BE FITTED UNDER ALL BOLTS AND NUTS
ALL BOLT HOLES, IN CASTINGS, ARE TO BE SPOT FACED
ALL INTERNAL BOLTING TO BE STAINLESS STEEL 304,
ALL EXTERNAL BOLTING TO BE HIGH TENSILE – HOT DIP GALVANIZED U.O.S.

MARKINGS REQUIRED: BODIES
NOMINAL SIZE (DN900)
NOMINAL PRESSURE (PN40)
ARROW TO INDICATE THE DIRECTION OF SEALING →
MATERIAL: (CS-S335JR)

NOTE: STAINLESS STEEL DWA NAME PLATE REQUIRED & STAINLESS STEEL FASTENERS.
AT TOP DEAD CENTRE OF ONE FLANGE MACHINE FOUR NOTCHES 3mm WIDE x 3mm DEEP.
MASS OF COUNTER WEIGHT = 4400 Kg. 3
MASS OF COMPLETE VALVE ASSEMBLY = 8000 Kg.
TOTAL MASS OF COMPLETE VALVE ASSEMBLY = 12400 Kg.

1 OPERATING DETAILS: SEATING TORQUE AT TRUNION SHAFT = 221 200 Nm.
UNSEATING TORQUE AT TRUNION SHAFT = 202 400 Nm.
CLOSING TIME = 15 SECONDS.
CYLINDER DESIGN PRESSURE = 19 MPa.
CYLINDER STROKE = 700 mm.
CYLINDERS' OIL CAPACITY (VALVE OPEN) = 26.6 LITERS.
CYLINDER OIL CAPACITY (VALVE CLOSED) = 12.5 LITERS.

	ITEM	DESCRIPTION	MATERIAL & SPECIFICATION	REF. No.
1	9	SEAL RETAINING RING	ST/STEEL – 304	
1	8	HYDRAULIC CYLINDER – 220 X 160 X 700	ST/STEEL – 304	
	7	COUNTER WEIGHT	CARBON STEEL – BS EN 10025 – S235JR (Fab.)	
	6	PRIMARY SEAL	E.P.D.M.	
	5	SHAFT BEARINGS	Self lubricated Bearing FZ-2	
	4	BODY SEAT	ST/STEEL 316 – WELD DEPOSIT	
	3	TRUNION SHAFT	ST/STEEL BS 970 Gr 431S29 (EN57)	
	2	TRUNION	CARBON STEEL – BS EN 10255 – S335JR (Fab.)	
	1	BODY	CARBON STEEL – BS EN 10255 – S335JR (Fab.)	

APPROVAL STATUS
REF: W9982
[X] A APPROVED FOR MANUFACTURE
[ ] B APPROVED SUBJECT TO COMMENTS
[ ] C APPROVED, RESUBMIT AFTER CHANGES
[ ] D DO NOT PROCEED
SIGNATURE: DATE: 13/12/2010

REV.	MODIFICATIONS	DRN.	DATE	APP.
4	DIMENSION 950 WAS 902.5mm. DIMENSION 1180 WAS 1121mm. DIMENSION 1360 WAS 1292mm.	ASB	1.10.10	
3	DIMENSIONS & DETAILS VERIFIED BY SUPPLIER.	ASB	27.9.10	
2	DIMENSIONS VERIFIED BY SUPPLIER. DIM 2505 WAS 1750mm. DIM 1470 WAS 1120mm. DIM 2950 WAS 2780mm. DIM 2490 WAS 1750mm. LEVER & WEIGHT SWING RADIUS WAS 1800mm.	ASB	28.8.10	
1	DIMENSIONS VERIFIED BY SUPPLIER. OPERATING DETAILS SHOWN IN NOTES. FINAL POSITION OF LEVER / WEIGHT AND CYLINDER ASSEMBLY REVISED. ITEM 8 & 9 SHOWN IN PARTS LIST.	ASB	30.6.10	
0	FIRST ISSUE FOR APPROVAL.	ASB	15.9.09	

REVISIONS

ALL DIM'S IN mm DO NOT SCALE FROM DRAWING
DRAWN BY A.S-BEST DATE 15/9/09
CHECKED BY DATE
APPROVED BY DATE
SCALE N.T.S. DRAWING REFERENCE No.
COMPUTER FILE NAME.
PATTERN No.
PROJECT No.

Premier Valves (PTY.) LTD.
TITLE
DN900 – PN40
SPHERICAL VALVE
DRG. No. GA9029 SHEET 1 of 2 REV. No. 4

SCHEME
KLIPHOEK PUMPING STATION
DELIVERY VALVE
PROVINCE:
DISTRICT:
KEY CODES:
CALCULATION FILE:
TENDER No. W9982
LOCALITY No.
CONTRACT No. W9982
1 SHEET OF 2
DEPARTMENT OF WATER AFFAIRS DRAWING REG. No.

900Qc747X-40C-0